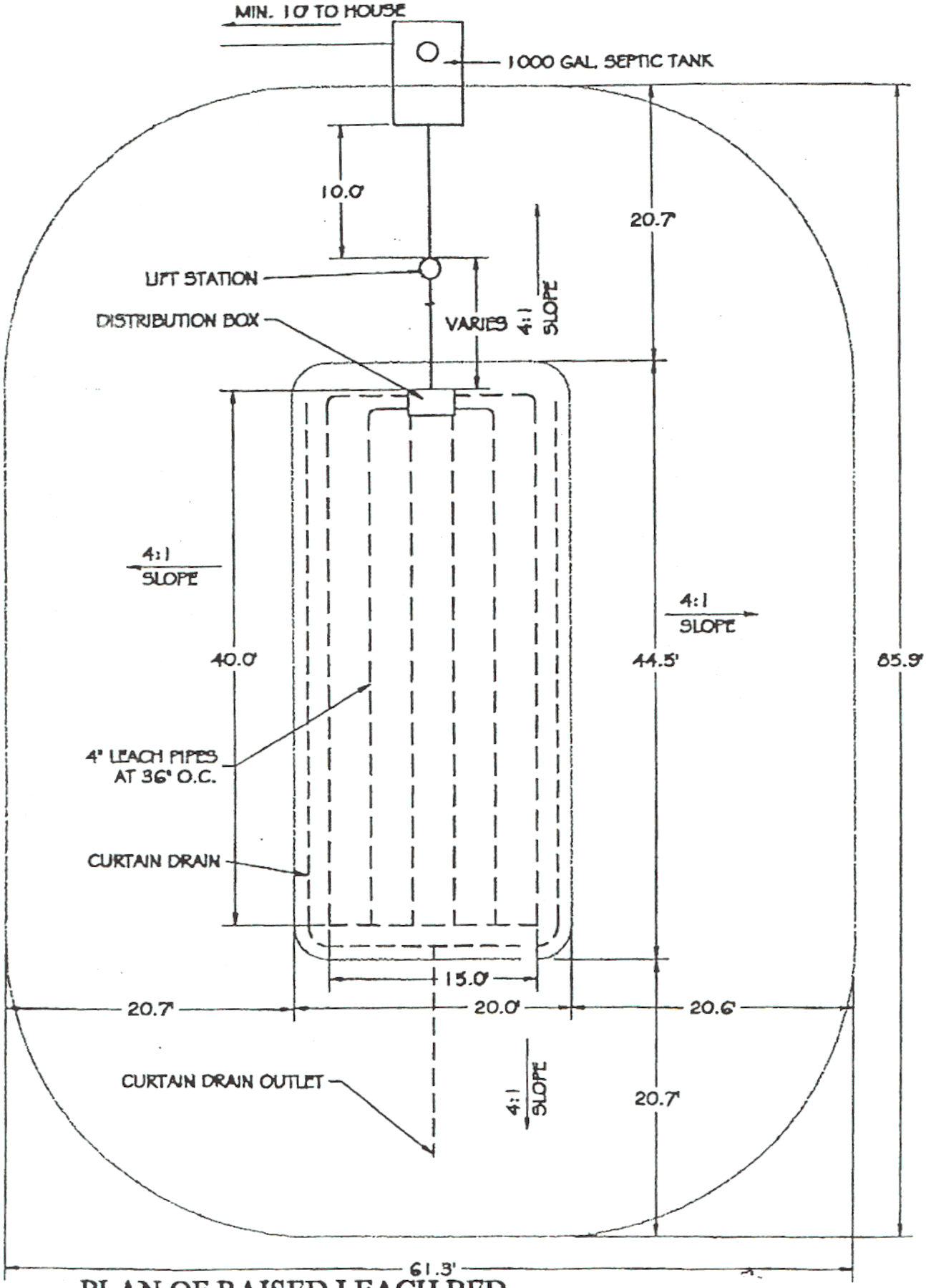

PLAN OF RAISED LEACH BED

ON 12' DEEP EXISTING SOIL OVER BEDROCK
FOR A TWO BEDROOM, SEASONAL COTTAGE ON KELLEYS ISLAND
1" = 10'-0"

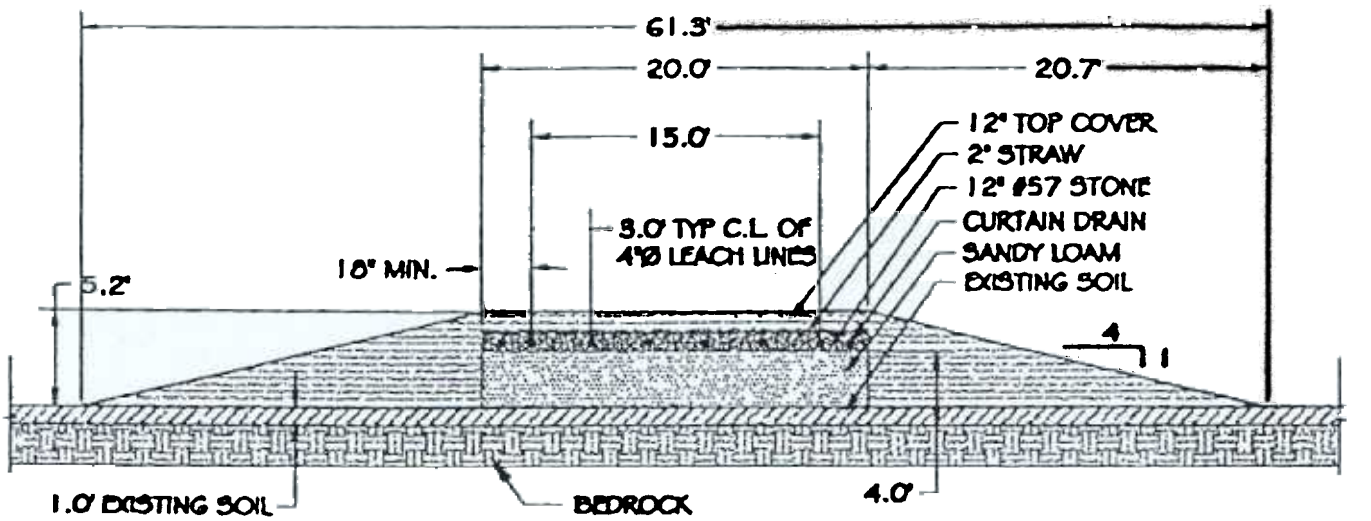

SECTION OF RAISED LEACH BED

ON 12" DEEP EXISTING SOIL OVER BEDROCK
1" = 10' - 0"

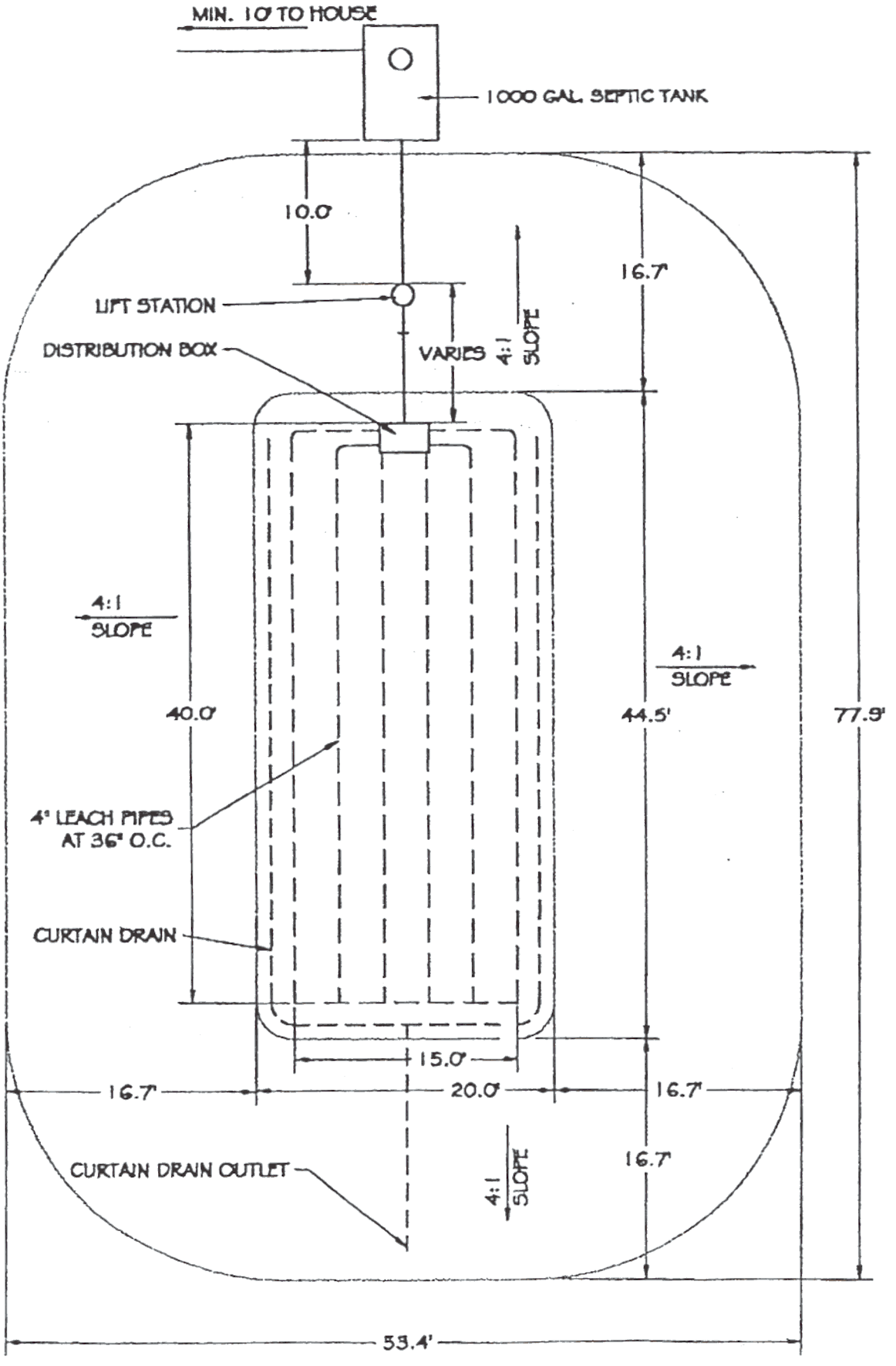

PLAN OF RAISED LEACH BED

ON 24" DEEP EXISTING SOIL OVER BEDROCK

1" = 10'-0"

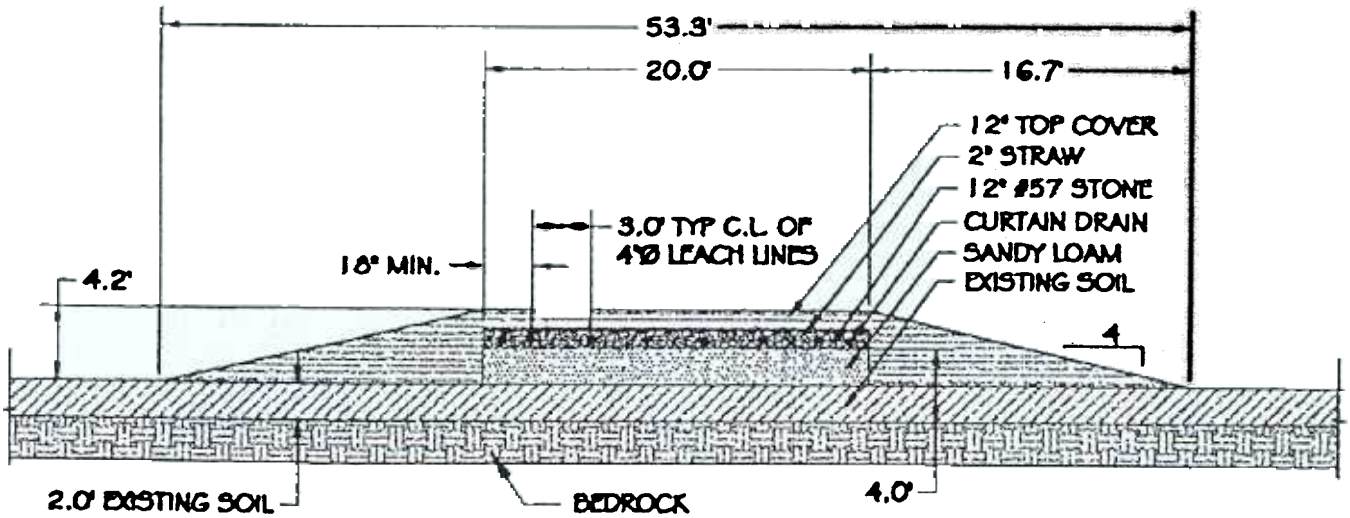

SECTION OF RAISED LEACH BED

ON 24" DEEP EXISTING SOIL OVER BEDROCK
1" = 10' - 0"